## Description

SEH07M50LGD is a half-bridge Intelligent Power Module (IPM) designed for advanced appliance motor drive applications such as energy efficient fans and pumps. The module integrates 2 fast recovery MOSFETs and 1 high voltage gate driver (HVIC) in a familiar ESOP13 package. The module is optimized for high performance and low EMI characteristics.

## Features

- 500V DC/AC half-bridge MOSFETs ($R_{DS_ON.typ}=1.3\Omega$) inverter
- High performance HVIC for gate driving and undervoltage protection
- 3.3V and 5V input logic compatible
- Compact ESOP13 package
- Schmitt trigger inputs with hysteresis
- High switching speed MOSFETs with fast recovery body diode

ESOP13 Package

## Applications

- Small power motors for general purpose industrial instruments
- Air conditioner in-door fans
- Compressor control for refrigerator
- Hair drier

## Package Marking and Ordering Information

| Part # | Package | Packing | Quantity | Bootstrap Diode | $V_{TS}$ Temperature Sense |
|---|---|---|---|---|---|
| SEH07M50LGD | ESOP-13L | Tape and Reel | 2500 | Yes | No |

## Internal Electrical Schematic

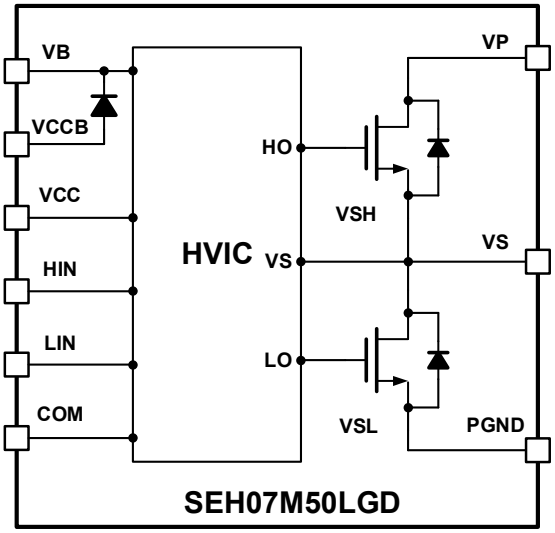

## Pin-Out Description

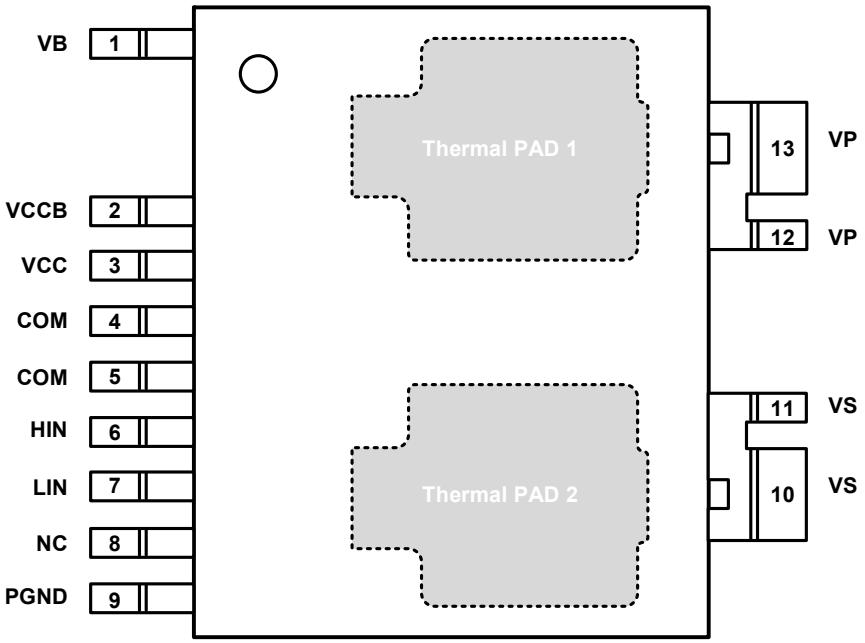


Top View

| PIN Number | PIN Name | Description |
|---|---|---|
| 1 | VB | High side floating supply voltage |
| 2 | VCCB | Power supply for the anode of bootstrap diode |
| 3 | VCC | Power supply for low side |
| 4, 5 | COM | Logic ground and low side return |
| 6 | HIN | Logic input for high side gate driver |
| 7 | LIN | Logic input for low side gate driver |
| 8 | NC | No connection |
| 9 | PGND | Power ground and low side MOSFET return |
| 10,11 | VS | High side floating offset voltage connected with thermal PAD2 (Drain for low side MOSFET) |
| 12,13 | VP | DC bus voltage positive connected with thermal PAD1 (Drain for high side MOSFET) |

## Absolute Maximum Ratings

Absolute maximum ratings indicate sustained limits beyond which damage to the module may occur.

| Inverter Part | | | | |
|---|---|---|---|---|
| **Symbol** | **Description** | **Ratings** | **Units** | **Test Condition** |
| $BV_{DSS}$ | Maximum Drain to Source Breakdown Voltage | 500 | V | $V_{GS}$=0V, $I_D$=250μA |
| $I_{DC}$ | Each MOSFET Drain to Source Continue Current | 7 | A | $T_C$=25ºC, $T_J$≤150 ºC |
| $P_D$ | Max Power Dissipation | 7.5 | W | $T_C$=25ºC |
| $T_J$ | Operation Junction Temperature | -20~150 | ºC | --- |
| **Control Part** | | | | |
| **Symbol** | **Description** | **Ratings** | **Unit** | **Test Condition** |
| $V_{CC}$ | Low Side Supply Voltage | 20 | V | Applied between VCC and COM |
| $V_{BS}$ | High Side Floating Supply Voltage | 20 | V | Applied between VB and VS |
| $V_{IN}$ | Input Signal Voltage (HIN, LIN) | -0.3~20+0.3 | V | Applied between IN and COM |

## Recommended Operating Conditions

| Symbol | Description | Min. | Typ. | Max. | Units |
|---|---|---|---|---|---|
| $V_P$ | Positive DC Bus Input Voltage | --- | 300 | 400 | V |
| $V_S$ | High Side Floating Supply Offset Voltage | --- | 300 | 400 | V |
| $V_B$ | High Side Floating Supply Voltage | $V_S$+10 | $V_S$+15 | $V_S$+20 | V |
| $V_{CC}$ | Low Side and Logic Supply Voltage | 10 | 15 | 20 | V |
| $V_{IN}$ | Logic Input Voltage | COM | --- | $V_{CC}$ | V |
| $F_P$ | PWM Carrier Frequency | --- | --- | 20 | kHz |
| DT | Dead Time | 1 | --- | --- | μs |

## Static Electrical Characteristics ($V_{CC}$-COM= $V_B$-$V_S$ =15 V. $T_a$ = 25℃ unless otherwise specified.)

| Symbol | Description | Min. | Typ. | Max. | Units | Conditions |
|---|---|---|---|---|---|---|
| $BV_{DSS}$ | Drain-to-Source Breakdown Voltage | 500 | --- | --- | V | $T_J$=25°C, $I_{LK}$=250μA |
| $I_{LKH}$ | Leakage Current of High Side MOSFET | --- | 1 | --- | μA | $T_J$=25°C, $V_{GS}$=0V $V_{DS}$=500V |
| $I_{LKL}$ | Leakage Current of Low Side MOSFET | --- | 1 | --- | μA | $T_J$=25°C, $V_{GS}$=0V $V_{DS}$=500V |
| $R_{DS_ON}$ | Drain to Source ON Resistance | --- | 1.3 | --- | Ω | $V_{GS}$=10V, $I_D$=3A |
| $V_{HIN/LIN}$ | Logic “1” Input Voltage for HIN and LIN | --- | 2.1 | 3 | V | $V_{CC}$=10V-20V |
| $V_{HIN/LIN}$ | Logic “0” Input Voltage for HIN and LIN | 0.8 | 1.2 | --- | V | $V_{CC}$=10V-20V |
| $V_{CCUV+}$ | $V_{CC}$ Supply Under-Voltage, Positive Going Threshold | 8 | 9.2 | 9.8 | V | |
| $V_{CCUV-}$ | $V_{CC}$ Supply Under-Voltage, Negative Going Threshold | 7.1 | 8.2 | 8.9 | V | |

| | | | | | | |
|---|---|---|---|---|---|---|
| $V_{CCUVH}$ | $V_{CC}$ Supply Under-Voltage Lock-Out Hysteresis | --- | 1 | --- | V | |
| $I_{QBS}$ | Quiescent $V_{BS}$ Supply Current $V_{IN}$=0V | --- | 110 | 130 | μA | $V_{IN}$=5V or 0V |
| $I_{QCC}$ | Quiescent $V_{CC}$ Supply Current $V_{IN}$=0V | --- | 165 | 220 | μA | $V_{IN}$=5V or 0V |
| $I_{IN+}$ | Input Bias Current $V_{IN}$=5V | --- | 9 | 15 | μA | $V_{IN}$=5V |
| $I_{IN-}$ | Input Bias Current $V_{IN}$=0V | - | 0 | 1 | μA | $V_{IN}$=0V |
| $R_{BSD}$ | Recommended Bootstrap Diode Resistor | 20 | --- | --- | Ohm | $V_{CC}$=15V |

## Dynamic Electrical Characteristics

| Symbol | Description | Min. | Typ. | Max. | Units | Conditions |
|---|---|---|---|---|---|---|
| $T_{ON}$ | Input to Output Propagation Turn-On Delay Time | - | 450 | - | ns | $I_D$=100mA, $V_P$=5V |
| $T_{OFF}$ | Input to Output Propagation Turn-Off Delay Time | - | 500 | - | ns | |
| $DT_{Built-In}$ | Dead Time Built-In HVIC | 100 | 140 | 200 | ns | HIN=LIN=20kHz, D=50% |
| $T_{rr}$ | Reverse Recovery Time | - | 98 | - | ns | $V_{DC}$=400V, $I_D$=7A, $V_{CC}$=15V, L=1mH |
| $I_{rr}$ | Reverse Recovery Peak Current | - | 10 | - | A | |
| $E_{ON}$ | Switch-On Energy Loss | - | 308 | - | μJ | |
| $E_{OFF}$ | Switch-Off Energy Loss | - | 48 | - | μJ | |

## Thermal and Mechanical Characteristic (Measured under board mounted and still air conditions)

| Symbol | Description | Min. | Typ. | Max. | Units | Conditions |
|---|---|---|---|---|---|---|
| $R_{th(J-CT)}$ | Total Thermal Resistance Junction to Case Top | --- | 20 | --- | °C/W | |
| $R_{th\ (J-CB)}$ | Total Thermal Resistance Junction to Case Bottom | --- | 1.0 | --- | | |

## Qualification Information

| | | |
|---|---|---|
| Qualification Level | | Industrial |
| Moisture Sensitivity Level | | MSL3* |
| ESD | Machine Mode | M4 |
| | Human Body Model | Class 1C |
| RoHS Compliant | | Yes |

* Higher MSL ratings can be available for the specific package types listed here.

## Function Description

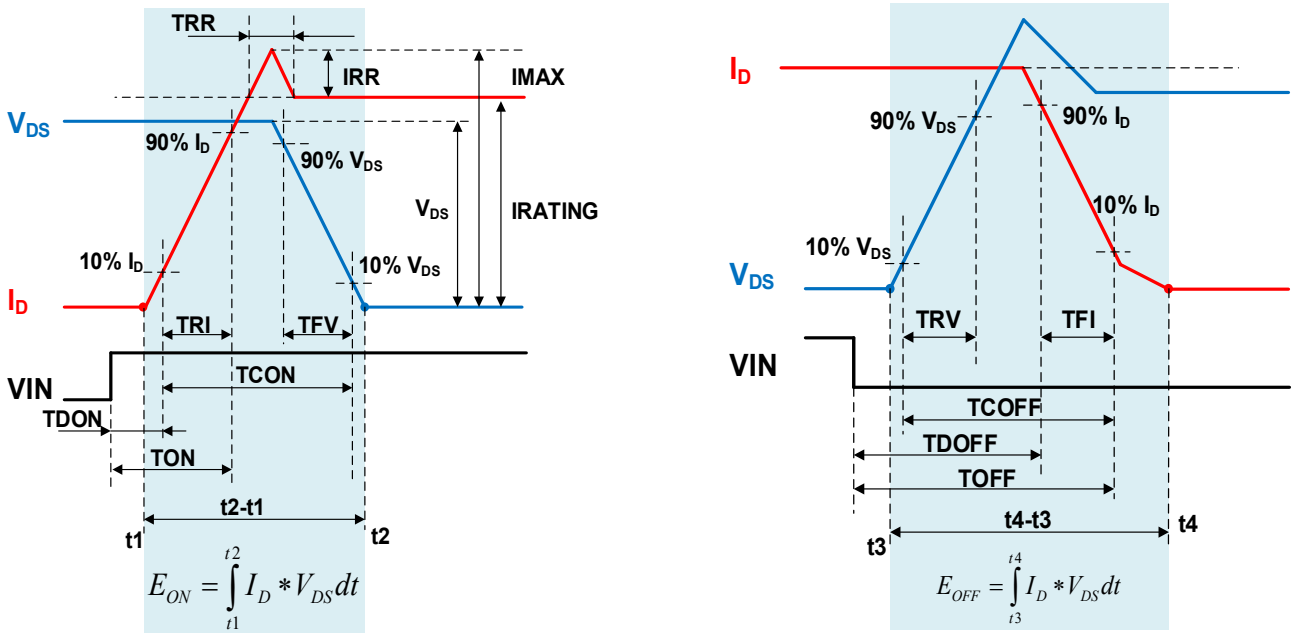


Definition of $T_{rr}$, $I_{rr}$, $E_{ON}$, $E_{OFF}$, $T_{ON}$ and $T_{OFF}$

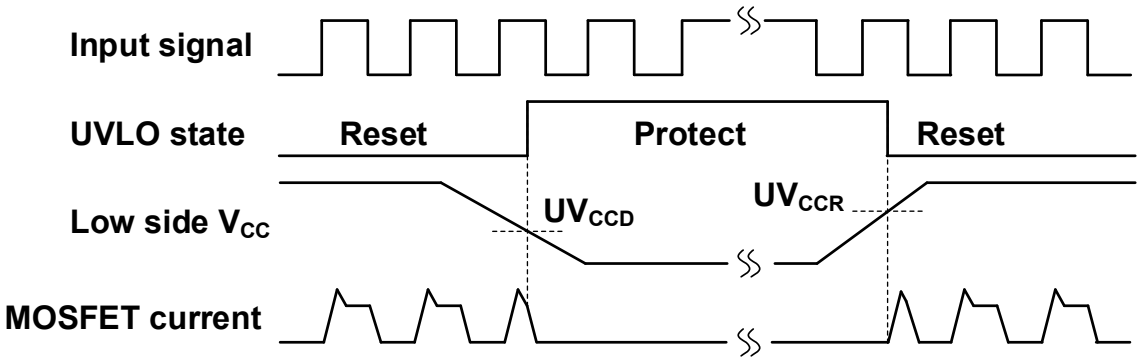


Undervoltage protect (Low side)

## Typical Connection for BLDC Motor Application

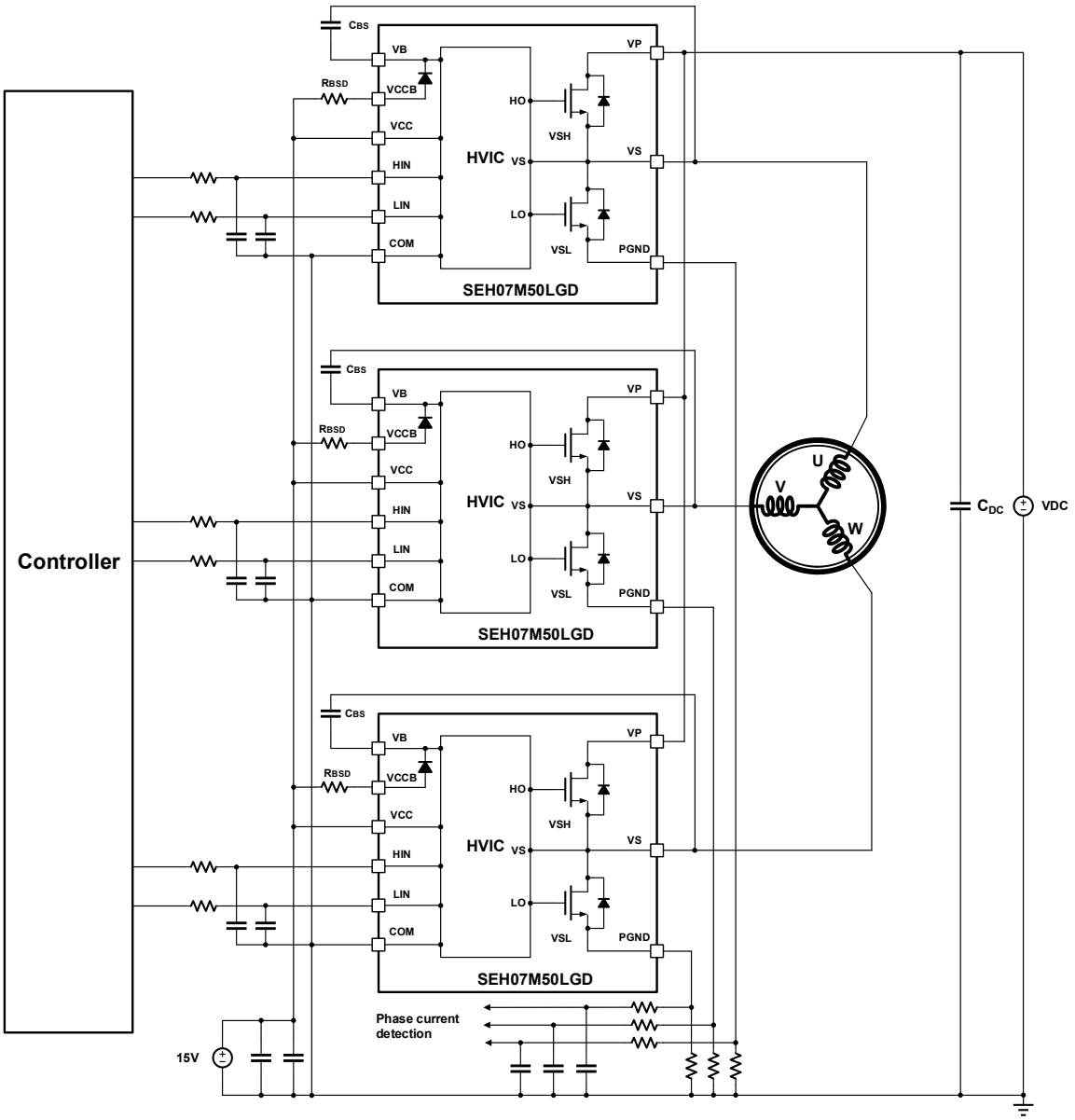


Typical High-Speed BLDC Motor Application

**NOTES**

1. To minimize ringing and EMI complications, bus capacitors must be positioned in close proximity to the module's bus terminals. The inclusion of high-frequency ceramic capacitors in the vicinity of the module pins will yield additional performance enhancements.

2. To ensure effective decoupling between the VCC-COM and VB-VS terminals, the capacitors connected to these terminals should be placed in close proximity to the module pins. It is advisable to incorporate additional high-frequency capacitors, usually 0.1μF in value, for optimal performance.

3. The bootstrap capacitors depends upon the switching frequency, capacitance above 2.2μF is recommended. The $R_{BSD}$≥20Ω resistor is recommended between the VCCB and VB terminals.

## Package Outline

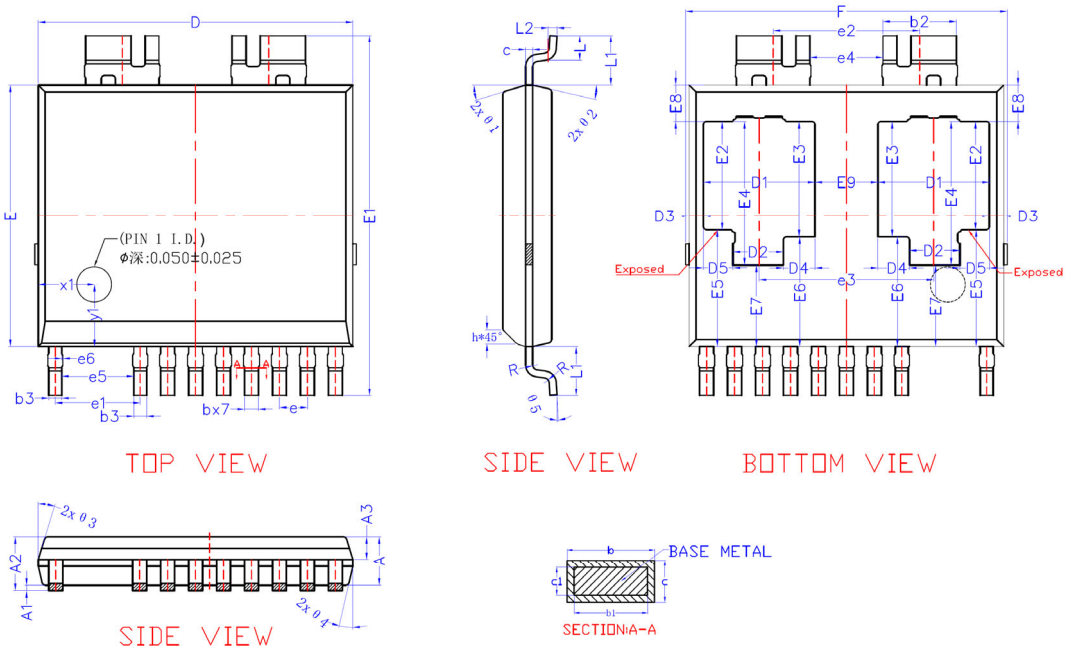





COMMON DIMENSIONS
(UNITS OF MEASURE=MILLIMETER)

| SYMBOL | MIN | NOM | MAX |
|---|---|---|---|
| A | 1.350 | 1.400 | 1.450 |
| A1 | 0.020 | / | 0.120 |
| A2 | 1.370 | / | 1.570 |
| A3 | 0.600 | 0.650 | 0.700 |
| b | 0.380 | / | 0.460 |
| b1 | 0.370 | 0.400 | 0.430 |
| b2 | 2.050 | 2.100 | 2.150 |
| b3 | 0.320 | 0.370 | 0.420 |
| c | 0.193 | / | 0.253 |
| c1 | 0.170 | 0.203 | 0.230 |
| D | 8.900 | 9.000 | 9.100 |
| D1 | 3.090 | 3.190 | 3.290 |
| D2 | 1.340 | 1.440 | 1.540 |
| D3 | 0.310 | 0.410 | 0.510 |
| D4 | 0.805 | 0.905 | 1.005 |
| D5 | 0.745 | 0.845 | 0.945 |
| E | 7.400 | 7.500 | 7.600 |
| E1 | 10.240 | 10.340 | 10.440 |
| E2 | 3.018 | 3.118 | 3.218 |
| E3 | 3.218 | 3.318 | 3.418 |
| E4 | 4.018 | 4.118 | 4.218 |
| E5 | 3.250 | 3.350 | 3.450 |
| E6 | 3.050 | 3.150 | 3.250 |
| E7 | 2.250 | 2.350 | 2.450 |
| E8 | 0.932 | 1.032 | 1.132 |
| E9 | 1.750 | 1.800 | 1.850 |
| e | 0.750 | 0.800 | 0.850 |
| e1 | 2.380 | 2.430 | 2.480 |
| e2 | 4.140 | 4.190 | 4.240 |
| e3 | 4.940 | 4.990 | 5.040 |
| e4 | 2.040 | 2.090 | 2.140 |
| e5 | 1.910 | 2.060 | 2.110 |
| e6 | -0.02 | 0.030 | 0.080 |
| F | 9.000 | - | 9.400 |
| L | 0.620 | 0.720 | 0.820 |
| L1 | 1.320 | 1.420 | 1.520 |
| | 两边 L1差值: 0.15 MAX | | |
| L2 | 0.25 BSC | | |
| R | 0.10 | / | / |
| h | 0.35 | 0.40 | 0.45 |
| θ1 | 15° | 17° | 19° |
| θ2 | 11° | 13° | 15° |
| θ3 | 15° | 17° | 19° |
| θ4 | 11° | 13° | 15° |
| θ5 | 0° | 3° | 6° |
| φ | 0.90 | 1.00 | 1.10 |
| x1 | 1.50 | 1.60 | 1.70 |
| y1 | 1.70 | 1.80 | 1.90 |

# General Notes

### Application Information

For improved readability, the specification contains many application data points. When application information is given, it is advisory and doesnot form part of the specification for the device.

### Life Support Applications

These devices are not designed for use in life support appliances, or systems where malfunction of these products can reasonably be expected toresult in personal injuries. Customer using or selling these products for use in such applications do so at their own risk.

### Content Disclaimer

Light Semibucks (Wuxi) Co. Ltd. believes the information contained in this document to be accurate and reliable. However, it is subject to change without notice. No responsibility is assumed by Light Semibucks (Wuxi) Co. Ltd. for its use, nor for infringement of patents or other rights of third parties. No part of this publication may be reproduced, or transmitted in any form or by any means without the prior consent of Light Semibucks (Wuxi) Co. Ltd. Light Semibucks (Wuxi) Company Limited 's terms and conditions of sale apply at all times.

**Contact us:**

https://www.semibucks.com

Revision History

| | |
|---|---|
| Ver 1.0 | Initial version |
| Ver 1.1 | Update the data and figures |
| Ver 1.2 | Update the data and figures |
| | |
| | |